SEN201-1000 Wind Speed Sensor

Product description

The wind speed sensor produced by our company is a high-reliability, high-performance wind speed sensor. This series of sensors can stably and accurately collect environmental wind speed signals, and are suitable for high-altitude operations, construction machinery, port machinery and other occasions.

The sensor has a built-in digital circuit with strong resistance to radio frequency, electromagnetic interference and lightning surge. The circuit of the wind speed sensor collects the electrical signal of the wind cup speed output that is linearly related to the ambient horizontal wind speed; the main structural parts of the product are made of alloy materials and surface treated. The product has good waterproof and anti-aging capabilities, and the internal and rotating parts are all sealed, which can effectively prevent the intrusion of water, salt spray and dust.



Features

- Developed based on the principle of non-contact magnetic sensing measurement;
- Built-in high-performance sensor, the collected data is high-precision and reliable;
- Wide wind speed measurement range, low starting wind speed;
- The wind speed sensor adopts a full metal shell, good corrosion resistance and strong wind resistance;
- The circuit protection adopts a fault-tolerant design, and the sensor will not be damaged in the case of wrong wiring;
- Comply with CE EMC standards, multi-level lightning protection and surge protection design;
- Can work in a wide voltage range of 12-30VDC.

Applicable scene

- It is suitable for wind speed monitoring in factories, power plants, ports, mines, wind turbines, large-scale machinery and equipment, etc.

Performance

Measuring range	0~30m/s、0~50m/s、0~60m/s	Operating Voltage	DC 12-30V
Start wind speed	≤0.5m/s	Wind resistance	＞70m/s
Accuracy	±0.5m/s(＜5m/s),±3%FS(≥5m/s)	Protection level	Ip65
Operating temperature	-20℃~+85℃	Electrostatic protection	15KV
Working humidity	0%~95% (no condensation)	Output signal	4~20mA、RS485
Wind cup material	Aluminum alloy/polyester coating		

Dimensions

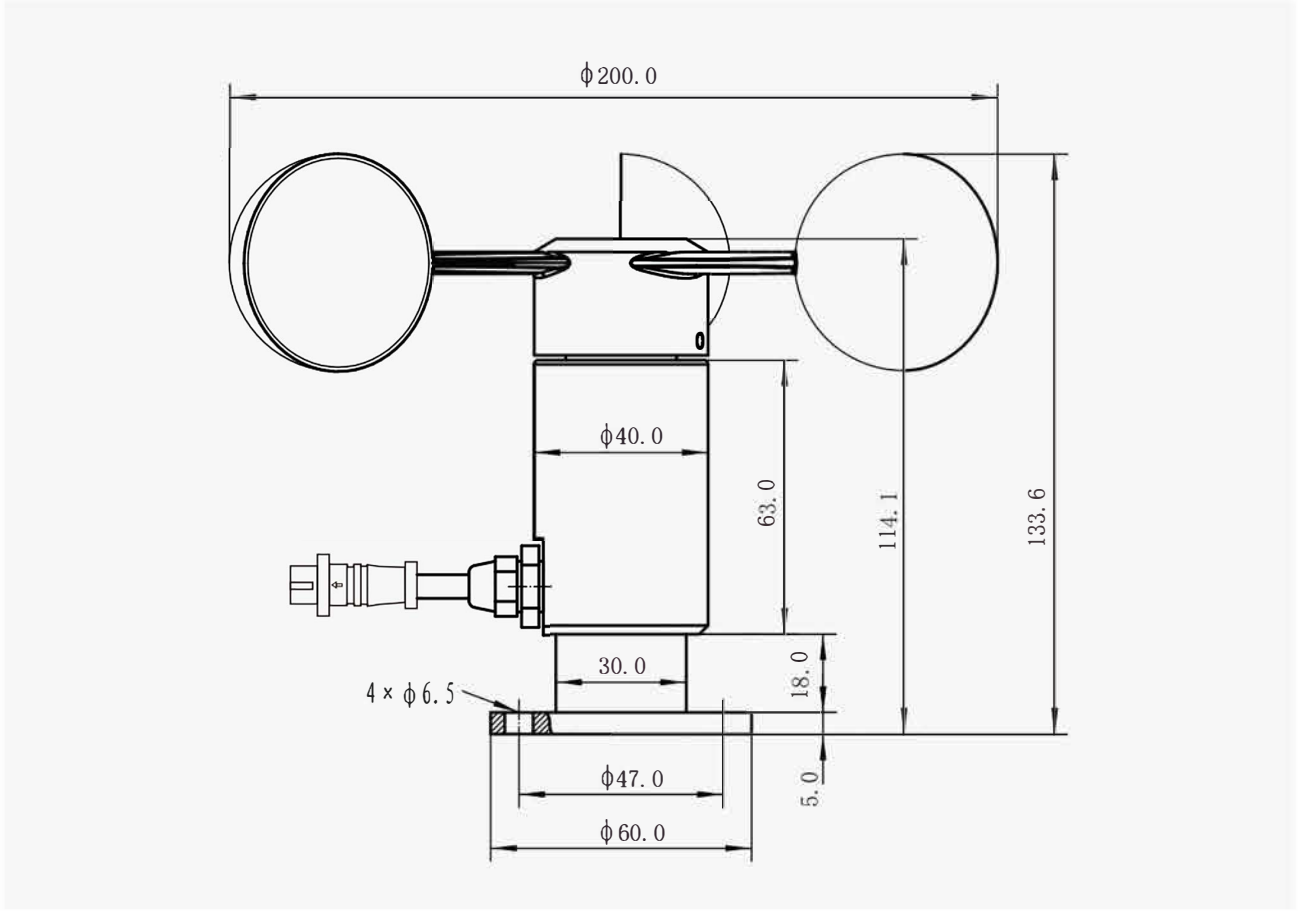

Electrical Connections

	Output signal	Sequence number	Wiring rules	
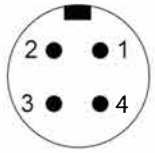 3-Wire Example of female connector	Current Type	1	+Vcc (power positive)	Red
		2	GND (power negative)	Black
		3	+Iout (output positive)	White
		4	PE (ground)	Yellow
	Digital	1	+Vcc (power positive)	Red
		2	GND (power negative)	Black
		3	RS485A	White
		4	RS485B	Yellow

Note: Other wiring methods can be customized, and the specific wiring is subject to the product logo.

Nanatoc

E :sales@nanatoc.com
W:www.nanatoc.com